CATERPILLAR®

SENR3486-01
March 1989

Schematic

3406 (PEEC) Diesel Truck Electrical System

8TC1-UP

©1989 Caterpillar
All Rights Reserved

Printed in U.S.A.

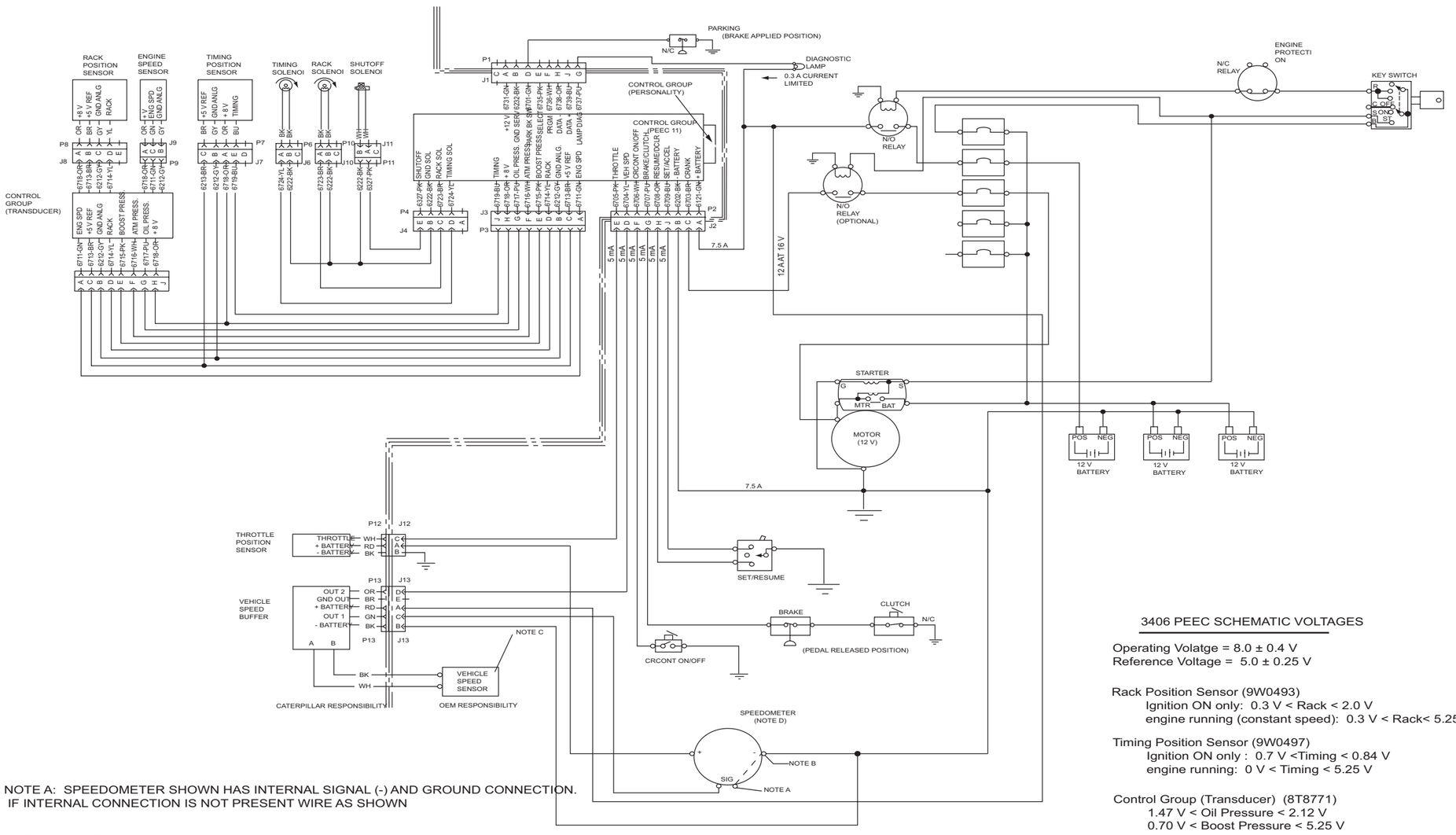

NOTE A: SPEEDOMETER SHOWN HAS INTERNAL SIGNAL (-) AND GROUND CONNECTION. IF INTERNAL CONNECTION IS NOT PRESENT WIRE AS SHOWN

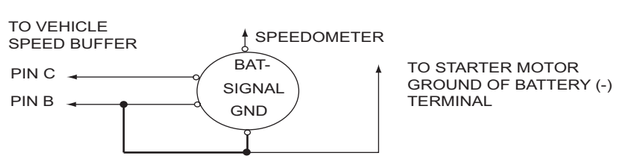

NOTE B: SINGLE POINT GROUND CONNECTION AT SPEEDOMETER REQUIRED FOR VEHICLE SPEED BUFFER AND SPEEDOMETER

NOTE C: "SINGLE" WINDING MAGNETIC PICKUP SENSOR REQUIRED

NOTE D: VEHICLE SPEED BUFFER IS DESIGNED TO OPERATE WITH SPEEDOMETERS WITH THE FOLLOWING SIGNAL CHARACTERISTICS:

VEHICLE SPEED BUFFER MAXIMUM SPEEDOMETER VOLTAGE	SIGNAL LOAD CURRENT
±6 Vpp	0.0 mA
±3 Vpp	1.0 mA
±1 Vpp	10.0 mA

OUTPUT VOLTAGE OF THE VEHICLE SPEED BUFFER IS A SQUARE WAVE WITH THE SAME FREQUENCY AS THE MAGNETIC PICKUP SENSOR SIGNAL AND THE AMPLITUDE WILL DEPEND UPON SPEEDOMETER LOAD CURRENT

NO ADDITIONAL CONNECTIONS ARE ALLOWED TO ANY 3406 PEEC SYSTEMS WIRES. THIS INCLUDES ALL WIRES TO SENSORS, SWITCHES, GROUND, BATTERY (+), OR BATTERY (-)

UNLESS OTHERWISE SPECIFIED:
ALL WIRE TO BE 18AWG OR LARGER
SAE J1128 TYPE SXL OR EQUIVALENT

3406 PEEC SCHEMATIC VOLTAGES

Operating Volatge = 8.0 ± 0.4 V
Reference Voltage = 5.0 ± 0.25 V

Rack Position Sensor (9W0493)
- Ignition ON only: 0.3 V < Rack < 2.0 V
- engine running (constant speed): 0.3 V < Rack< 5.25 V

Timing Position Sensor (9W0497)
- Ignition ON only : 0.7 V <Timing < 0.84 V
- engine running: 0 V < Timing < 5.25 V

Control Group (Transducer) (8T8771)
- 1.47 V < Oil Pressure < 2.12 V
- 0.70 V < Boost Pressure < 5.25 V

Shutoff Solenoid (6T9675)
- Pull-In Voltage > 4.5 V
- 1 V < Hold-In Voltage < 2 V
- Hold-In Current = 1.3A

Throttle Position Sensor (7T5596)
- 12 V Operating
- 0.0 V < PWM < 5.25 V

Rack And Timing Solenoid (6T1789)
- 0.0 To 3.6 V across leads

Engine Speed Sensor (6T6975)
- Frequency < 460 Hz

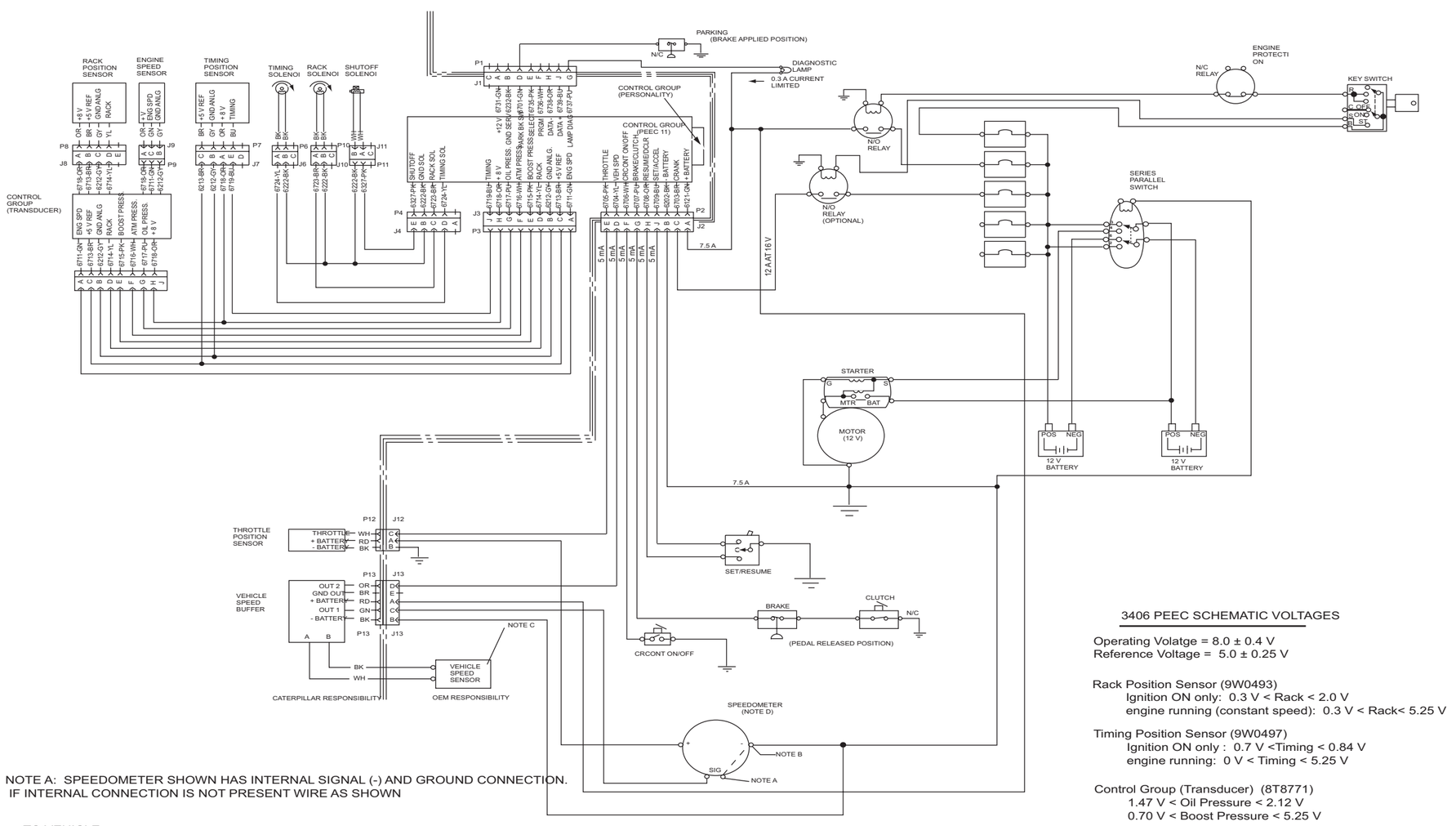

NOTE A: SPEEDOMETER SHOWN HAS INTERNAL SIGNAL (-) AND GROUND CONNECTION. IF INTERNAL CONNECTION IS NOT PRESENT WIRE AS SHOWN

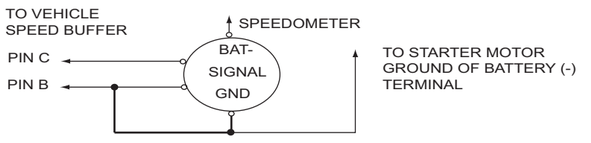

NOTE B: SINGLE POINT GROUND CONNECTION AT SPEEDOMETER REQUIRED FOR VEHICLE SPEED BUFFER AND SPEEDOMETER

NOTE C: "SINGLE" WINDING MAGNETIC PICKUP SENSOR REQUIRED

NOTE D: VEHICLE SPEED BUFFER IS DESIGNED TO OPERATE WITH SPEEDOMETERS WITH THE FOLLOWING SIGNAL CHARACTERISTICS:

VEHICLE SPEED BUFFER MAXIMUM SPEEDOMETER VOLTAGE	SIGNAL LOAD CURRENT
±6 Vpp	0.0 mA
±3 Vpp	1.0 mA
±1 Vpp	10.0 mA

OUTPUT VOLTAGE OF THE VEHICLE SPEED BUFFER IS A SQUARE WAVE WITH THE SAME FREQUENCY AS THE MAGNETIC PICKUP SENSOR SIGNAL AND THE AMPLITUDE WILL DEPEND UPON SPEEDOMETER LOAD CURRENT

NO ADDITIONAL CONNECTIONS ARE ALLOWED TO ANY 3406 PEEC SYSTEMS WIRES. THIS INCLUDES ALL WIRES TO SENSORS, SWITCHES, GROUND, BATTERY (+), OR BATTERY (-)

UNLESS OTHERWISE SPECIFIED:
ALL WIRE TO BE 18AWG OR LARGER
SAE J1128 TYPE SXL OR EQUIVALENT

3406 PEEC SCHEMATIC VOLTAGES

Operating Volatge = 8.0 ± 0.4 V
Reference Voltage = 5.0 ± 0.25 V

Rack Position Sensor (9W0493)
- Ignition ON only: 0.3 V < Rack < 2.0 V
- engine running (constant speed): 0.3 V < Rack< 5.25 V

Timing Position Sensor (9W0497)
- Ignition ON only : 0.7 V <Timing < 0.84 V
- engine running: 0 V < Timing < 5.25 V

Control Group (Transducer) (8T8771)
- 1.47 V < Oil Pressure < 2.12 V
- 0.70 V < Boost Pressure < 5.25 V

Shutoff Solenoid (6T9675)
- Pull-In Voltage > 4.5 V
- 1 V < Hold-In Voltage < 2 V
- Hold-In Current = 1.3A

Throttle Position Sensor (7T5596)
- 12 V Operating
- 0.0 V < PWM < 5.25 V

Rack And Timing Solenoid (6T1789)
- 0.0 To 3.6 V across leads

Engine Speed Sensor (6T6975)
- Frequency < 460 Hz

SENR3486-01
8 Page, NJJ