KENWORTH A DIVISION OF PACCAR — Control - Turn Stalk Module

P21-1012 - 01

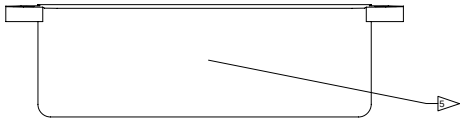

BASE NUMBER — SOFTWARE VARIATION, SEE TABLE "C"

P21-1012-XXX

DAYTIME RUNNING LAMP OPTION VARIATION, SEE TABLE "B"

TABLE "C": SOFTWARE VARIATION	
VARIATION	CONTROLLING SPECIFICATION
01	P98-5003E0001, WITH SECTION 7.4.2.2 (FAILURE MANAGEMENT FOR UNDER CURRENT TURN SIGNALS) REMOVED.
02	P98-5000E0001

TABLE "B": DAYTIME RUNNING LAMP OPTION VARIATION	
VARIATION	DRL ENABLED
3	NO
4	YES

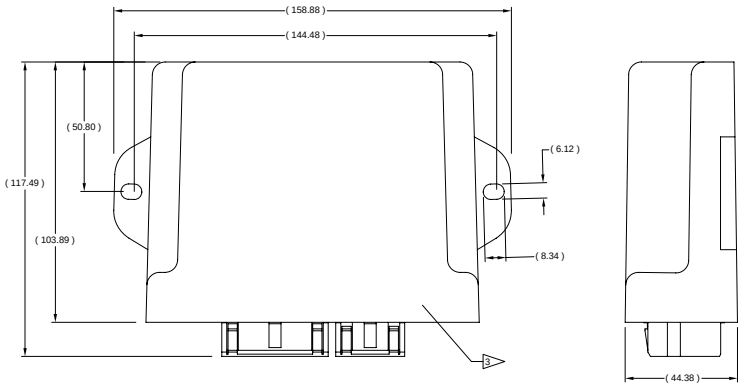

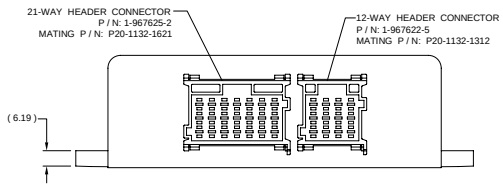

TERMINAL DESIGNATIONS

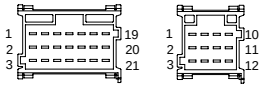

TABLE "A": ELECTRICAL INPUTS, OUTPUTS POWER AND GROUND

PIN	CATEGORY: S = SIGNAL INPUT G = GROUND P = POWER SOURCE O = OUTPUT	DESCRIPTION	ACTIVE HIGH / LOW	MAXIMUM STEADY STATE OPERATING CURRENT
21-WAY CONNECTOR				
1 **	O	LEFT TURN / HAZARD	-	20A*** COMBINED BETWEEN PINS 1 & 2
2 **	O	LEFT TURN / HAZARD	-	
3 **	P	LEFT TURN / HAZARD AND LEFT TURN / HAZARD/STOP	-	25A COMBINED BETWEEN PINS 3 & 6
4	P	ACCESSORY ACTIVE SIGNAL AND WASHER PUMP POWER	-	2A
5	S	HEADLAMPS ON / OFF	LOW	14mA
6 **	P	LEFT TURN / HAZARD AND LEFT TURN / HAZARD / STOP	-	25A COMBINED BETWEEN PINS 3 & 6
7	S	WIPER SPEEDS INTERMITTENT # 1 - # 4 AND LOW	RESISTOR LADDER	52mA
8	S	HEADLAMPS FLASH	LOW	14mA
9	O	LEFT TURN / HAZARD / STOP	-	5A
10	O	WASHER PUMP	-	2A
11	S	LEFT AND RIGHT TURN	RESISTOR LADDER	29mA
12	S	WASHER PUMP ON / OFF	LOW	14mA
13	O	HEADLAMPS HIGH BEAM	-	14A
14	< SPARE >			
15	S	HAZARD LAMP ON / OFF	LOW	14mA
16	O	HEADLAMPS LOW BEAM	-	11.5A
17	< SPARE >			
18	S	IGNITION ON / OFF	HIGH	14mA
19 *	P	HEADLAMPS LOW BEAM	-	11.5A
20	G	MODULE GROUND	-	300mA
21	S	SWITCH COMMON	LOW	1A
12-WAY CONNECTOR				
1	G	MODULE GROUND	-	300mA
2 *	P	MODULE BATTERY	-	1A
3	S	HEADLAMPS HI / LOW CYCLE	LOW	14mA
4	P	HEADLAMPS HIGH BEAM	-	14A
5	S	PARK BRAKE STATUS	LOW	14mA
6	S	SERVICE BRAKE STATUS	HIGH	14mA
7 **	O	RIGHT TURN / HAZARD	-	20A*** COMBINED BETWEEN PINS 7 & 10
8 * / **	P	RIGHT TURN / HAZARD AND RIGHT TURN / HAZARD/STOP	-	25A COMBINED BETWEEN PINS 8 & 11
9	O	WIPER MOTOR LOW (THIS IS A GROUNDING OUTPUT)	-	1A
10 **	O	RIGHT TURN / HAZARD	-	20A*** COMBINED BETWEEN PINS 7 & 10
11 * / **	P	RIGHT TURN / HAZARD AND RIGHT TURN / HAZARD / STOP	-	25A COMBINED BETWEEN PINS 8 & 11
12	O	RIGHT TURN / HAZARD / STOP	-	5A

* PIN 19 OF THE 21-WAY CONNECTOR, AND PINS 8 & 11 OF THE 12-WAY CONNECTOR, SUPPLY SECONDARY POWER TO THE CONTROLLER. THIS PREVENTS CONTROLLER SHUT DOWN IF BATTERY POWER IS LOST ON PIN 2 OF THE 12-WAY CONNECTOR.

** THE FOLLOWING PINS ARE INTERNALLY BUSSED TOGETHER:
PINS 7 & 10 (12-WAY CONNECTOR)
PINS 8 & 11 (12-WAY CONNECTOR)
PINS 1 & 2 (21-WAY CONNECTOR)
PINS 3 & 6 (21-WAY CONNECTOR)
PIN 20 (12-WAY CONNECTOR) & PIN 1 (21-WAY CONNECTOR)

*** AMPERAGE LIMITS ON THESE TERMINALS IS BASED ON A 35% DUTY CYCLE USAGE.

NOTES:

1) USE WITH MULTIFUNCTION TURN STALK AND NEW CAB INTERIOR.

2) FOR FULL MODULE FUNCTION, DESCRIPTION, REFERENCES AND APPLICABLE REGULATIONS, SEE SPECIFICATION AT LATEST REVISION PER TABLE "C".

3) INJECTION MOLDED ENCLOSURE. LID MATERIAL: PC / ABS - Dow Pulse 830 (BLACK)

4) MODULE MOUNTING BOLTS TO BE TORQUED TO 6 FT-LBF (8.1 N-m).

5) PART TRACEABILITY INFORMATION TO BE LOCATED APPROXIMATELY AS SHOWN.
LABEL TEXT COLOR FOR P21-1012-3XX: BLACK
LABEL TEXT COLOR FOR P21-1012-4XX: RED

6) OPERATIONAL VOLTAGE RANGE: 9-16VDC.

7) OPERATIONAL TEMPERATURE RANGE: -40°C TO +70°C.

8) ELECTRONICS ARE CONFORMALLY COATED.

9) MODULE HAS THESE OUTPUTS:
- HEADLAMPS (LOW & HIGH BEAMS)
- DAYTIME RUNNING LAMPS (POWERED VIA LOW BEAM OUTPUT)
- TURN AND HAZARD LAMPS, AND CHASSIS STOP LAMPS
- WINDSHIELD WASHER PUMP
- WINDSHIELD WIPER LOW AND INTERMITTENT SPEED CONTROL.

10) TURN SIGNAL AND HAZARD FLASH RATE: 85 PER MINUTE.

11) TURN SIGNAL AND HAZARD FLASH DUTY CYCLE:
UP TO 16 AMP CURRENT DRAW ON TURN / HAZARD OUTPUTS: 50%
ABOVE 16 AMP CURRENT DRAW ON TURN / HAZARD OUTPUTS: 35%

12) MAXIMUM NUMBER OF # 1156 OR # 1157 BULBS (27 WATT, 32 CANDLE POWER) PER TURN SIGNAL OUTPUT, BASED ON CURRENT DRAW CALCULATIONS:

OUTPUT	MAXIMUM NUMBER OF BULBS
LEFT OR RIGHT TURN / HAZARD	9
LEFT OR RIGHT TURN / HAZARD / STOP	2

13) MODULE OUTPUT BEHAVIOR IN THE PRESENCE OF AN OVERCURRENT SITUATION:

- LOW BEAM OUTPUT: IF THE LOW BEAM OUTPUT IS SHORTED, IS CONNECTED TO BULBS WHICH ARE RATED ABOVE 65 WATTS PER SIDE, OR FOR SOME OTHER REASON DRAW TOO MUCH CURRENT, THE OUTPUT WILL SHUT DOWN AND THE HIGH BEAMS WILL ACTIVATE AT REDUCED INTENSITY. AFTER 1 SECOND, THE LOW BEAM OUTPUT WILL REACTIVATE. IF THE PROBLEM IS GONE, THE LOW BEAMS WILL REMAIN ACTIVE AND THE HIGH BEAMS WILL SHUT DOWN.
IF THE PROBLEM PERSISTS, THE LOW BEAM OUTPUT WILL AGAIN SHUT DOWN. THIS CYCLE WILL HAPPEN AT MOST FIVE TIMES, AND THE FINAL STATE WILL BE HIGH BEAMS ON.

- HIGH BEAM, TURN / HAZARD AND TURN / HAZARD / STOP OUTPUTS: IF THE HIGH BEAM OUTPUT, OR A TURN / HAZARD OR TURN / HAZARD / STOP OUTPUT IS SHORTED, IS CONNECTED TO TOO MANY BULBS (SEE NOTE # 12 AND TABLE A), OR FOR SOME OTHER REASON DRAWS TOO MUCH CURRENT, THE OUTPUT WILL SHUT DOWN. AFTER FIVE SECONDS, THE OUTPUT WILL REACTIVATE. THE OUTPUT WILL ATTEMPT TO REACTIVATE EVERY FIVE SECONDS UNTIL THE PROBLEM IS FIXED.

14) KENWORTH REFERENCE DIAGRAMS:
- TURN, HAZARD AND STOP SIGNALS: P94-1470 OR SUPERSEDING DIAGRAM
- HEADLAMPS: P94-1461 OR SUPERSEDING DIAGRAM
- WINDSHIELD WIPERS & WASHER: P94-1465 OR SUPERSEDING DIAGRAM

15) PETERBILT REFERENCE DIAGRAM: P94-6023 OR SUPERSEDING DIAGRAM.

16) SUPERSEDES P21-1009: PROD X SERV X

DWG SIZE A0