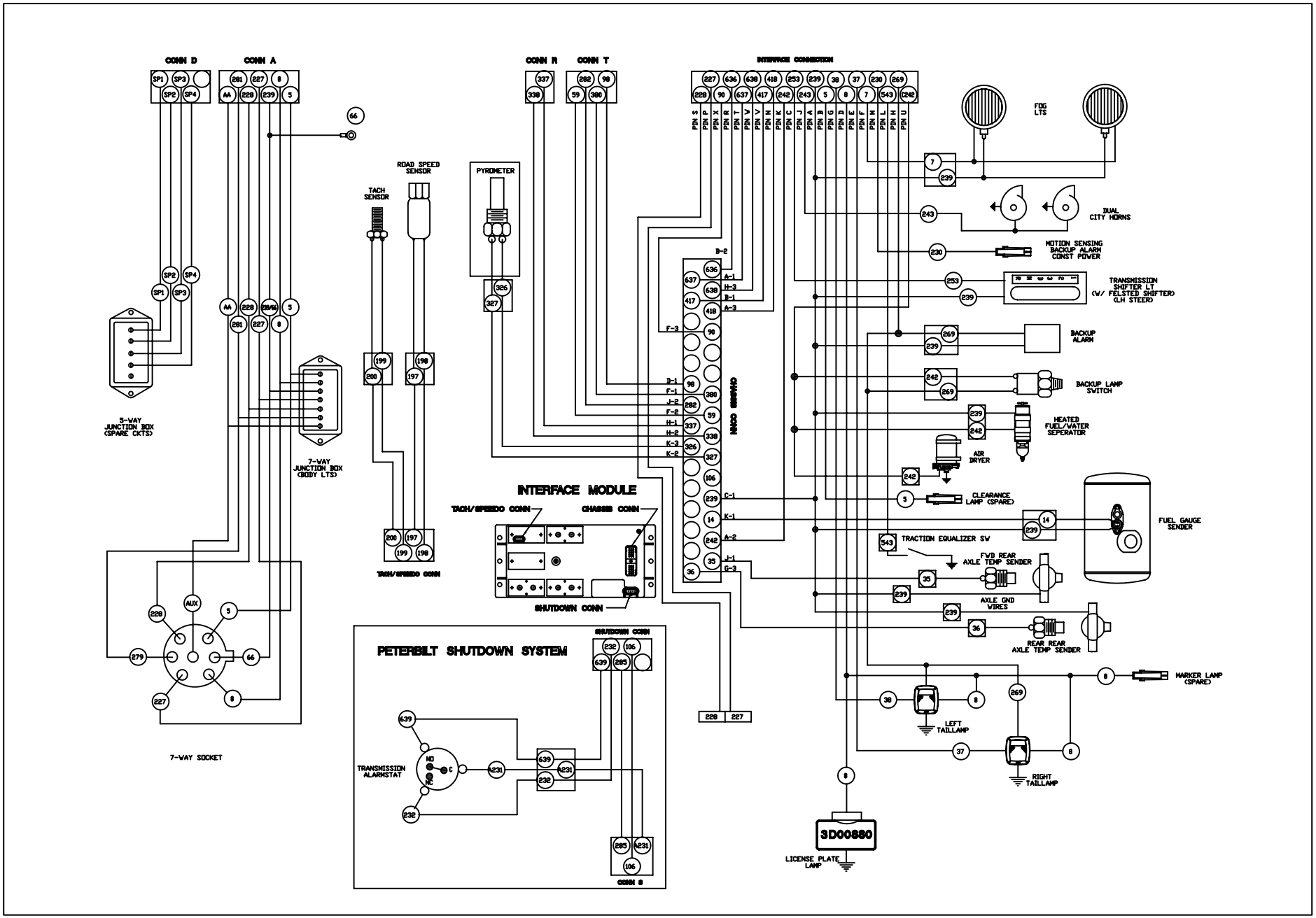

Peterbilt
A DIVISION OF PACCAR

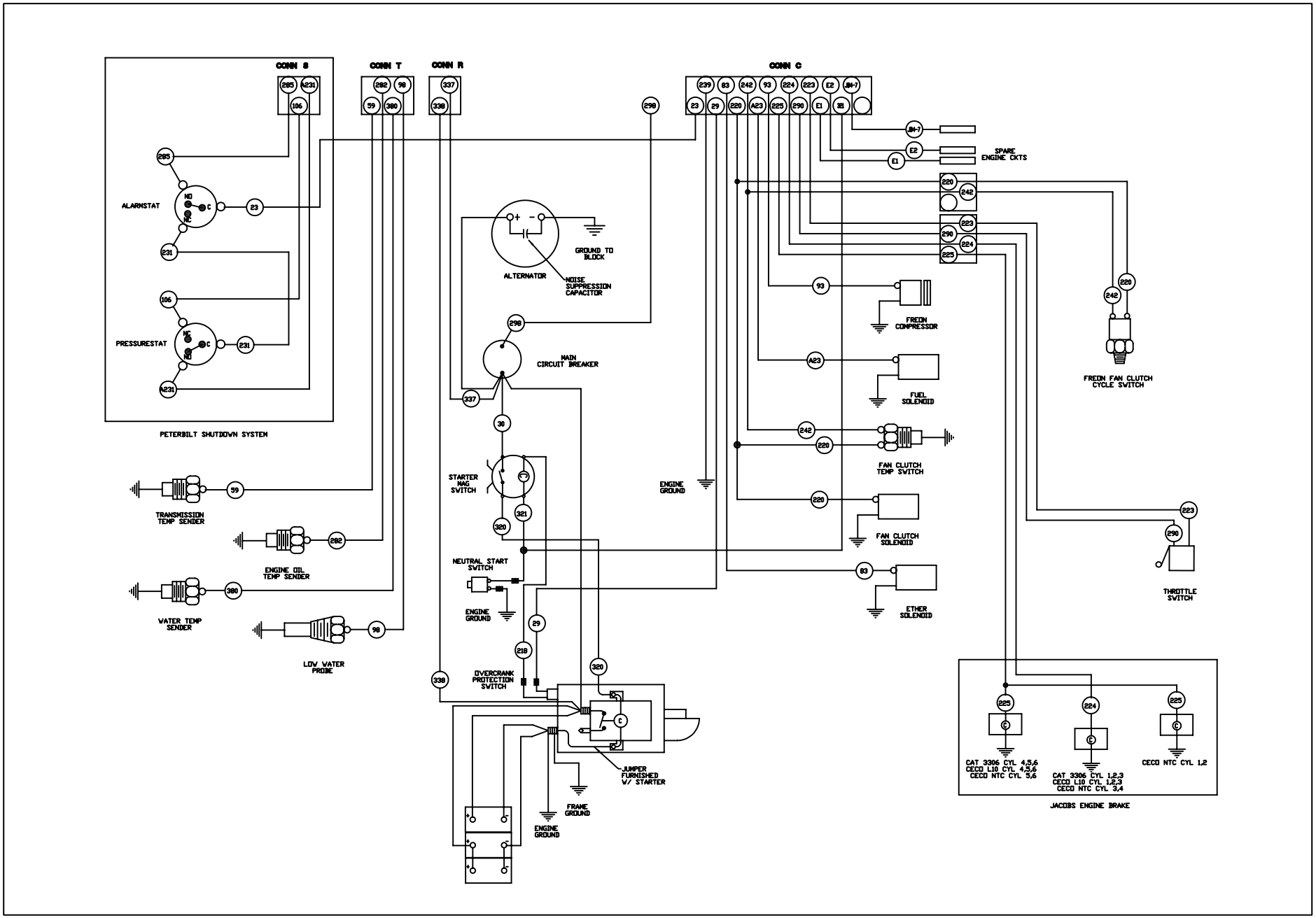

Peterbilt
A DIVISION OF PACCAR

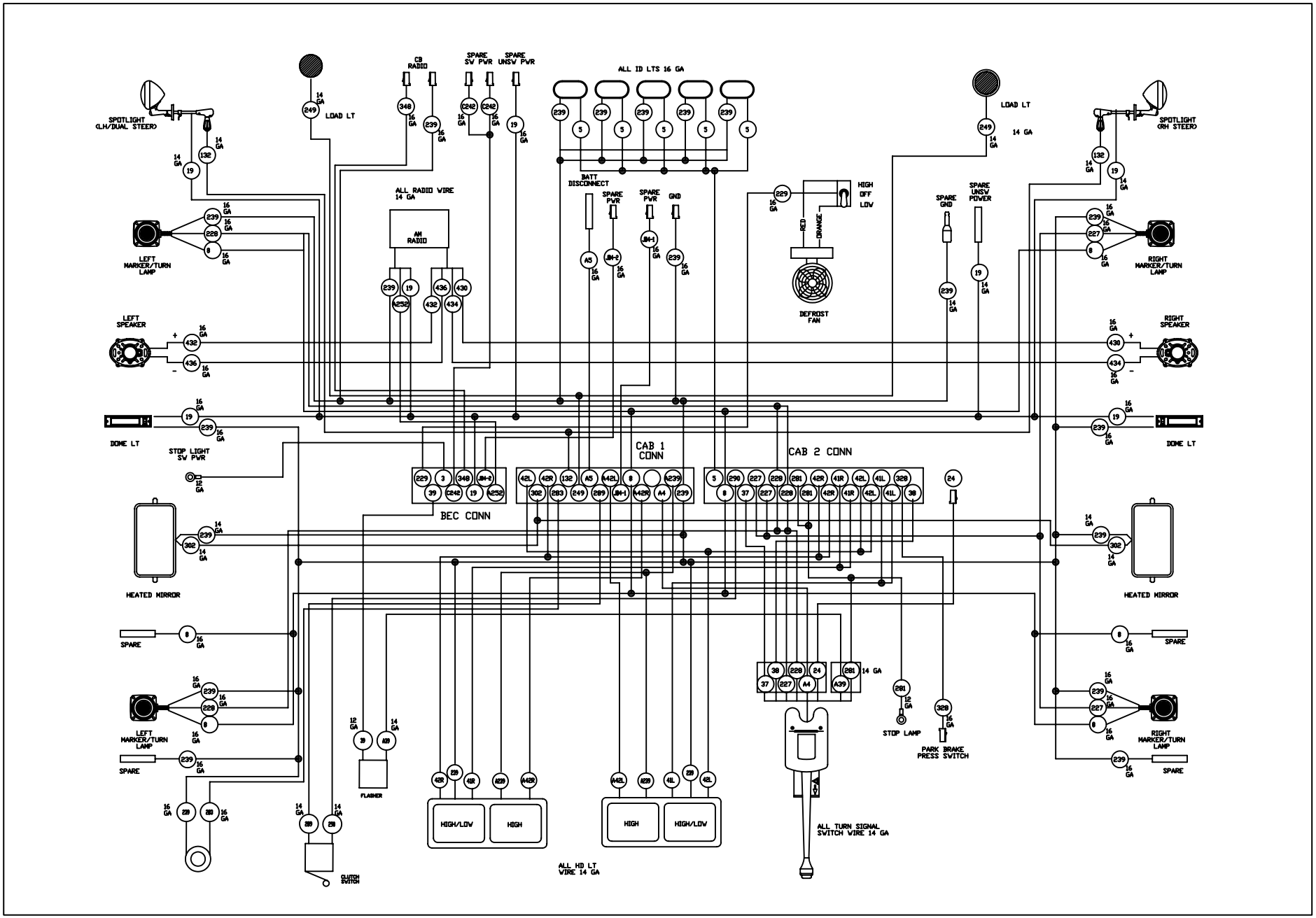

Peterbilt
A DIVISION OF PACCAR

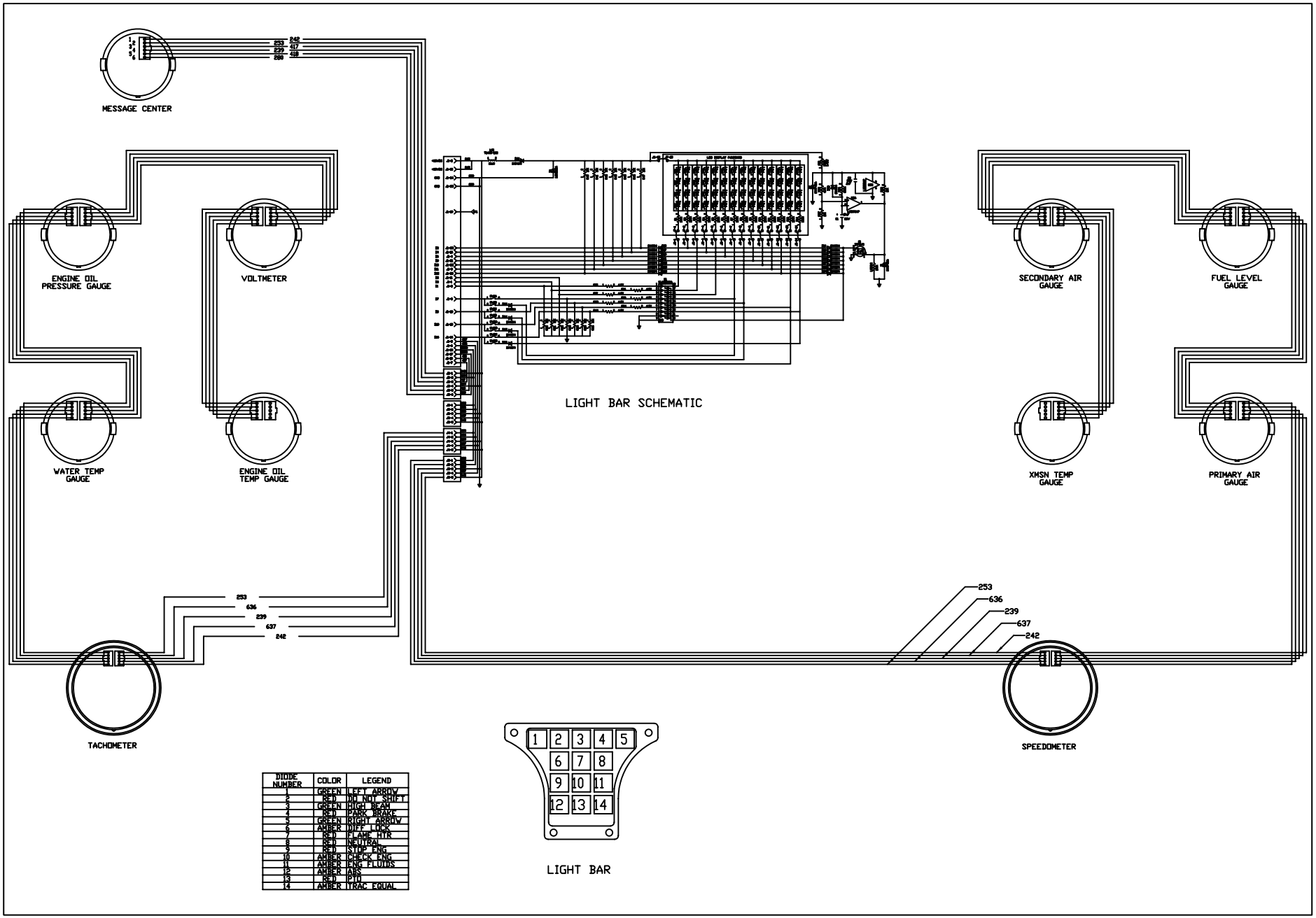

DIODE NUMBER	COLOR	LEGEND
1	GREEN	LEFT ARROW
2	RED	DO NOT SHIFT
3	GREEN	HIGH BEAM
4	RED	PARK BRAKE
5	GREEN	RIGHT ARROW
6	AMBER	DIFF LOCK
7	RED	FLAME HTR
8	RED	NEUTRAL
9	RED	STOP ENG
10	AMBER	CHECK ENG
11	AMBER	ENG FLUIDS
12	AMBER	ABS
13	RED	PTO
14	AMBER	TRAC EQUAL

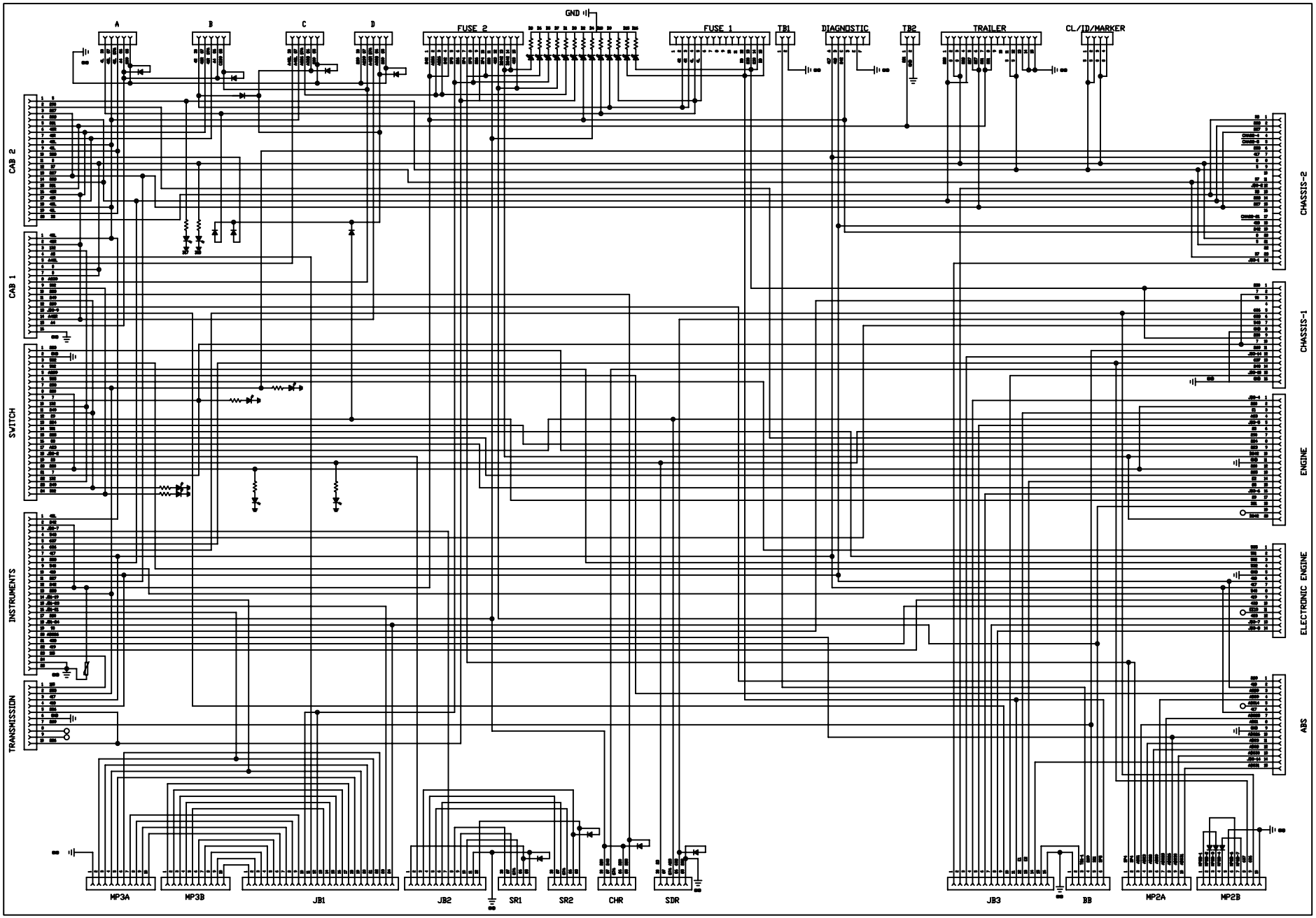

Peterbilt
A DIVISION OF PACCAR

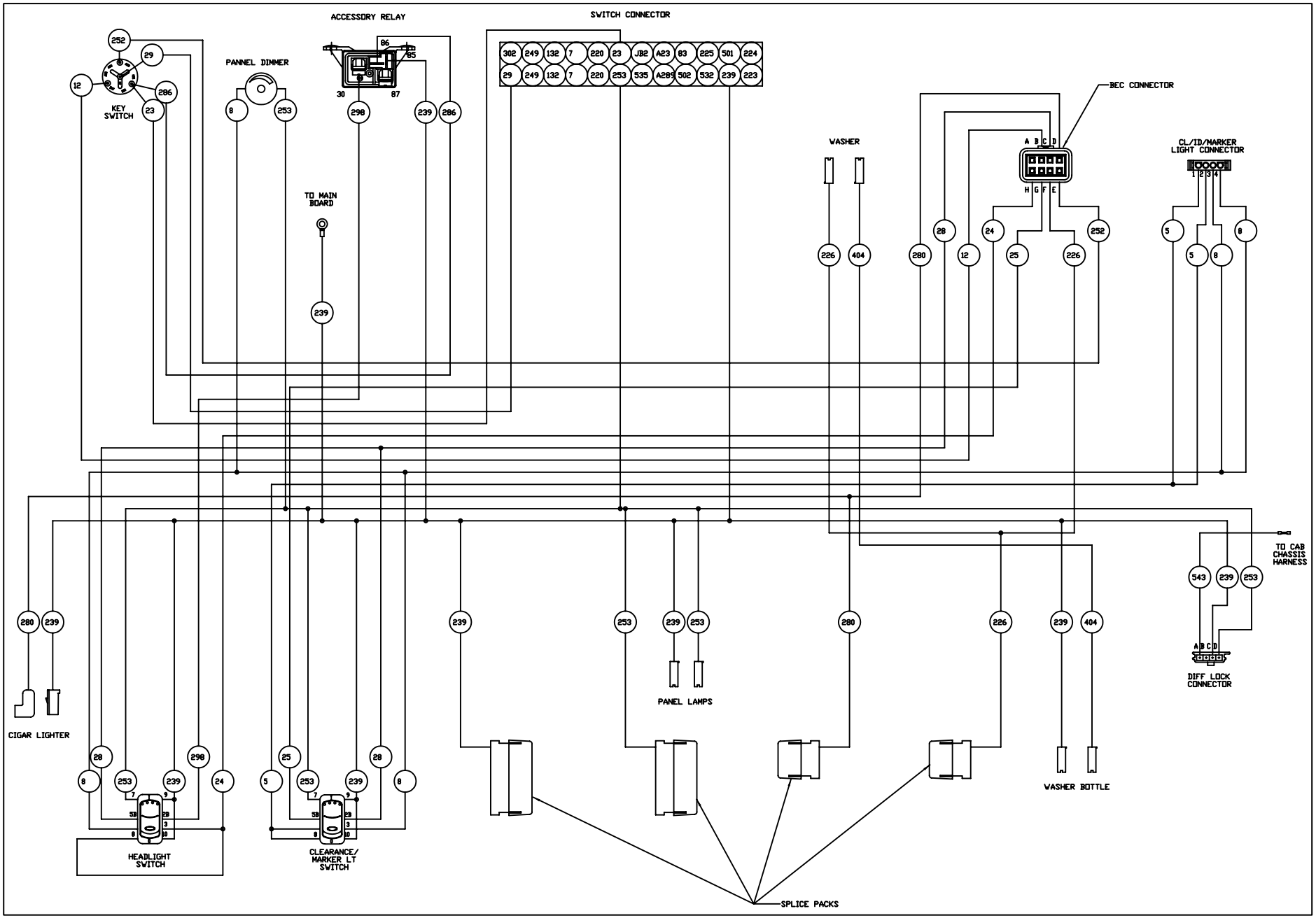

Peterbilt
A DIVISION OF PACCAR

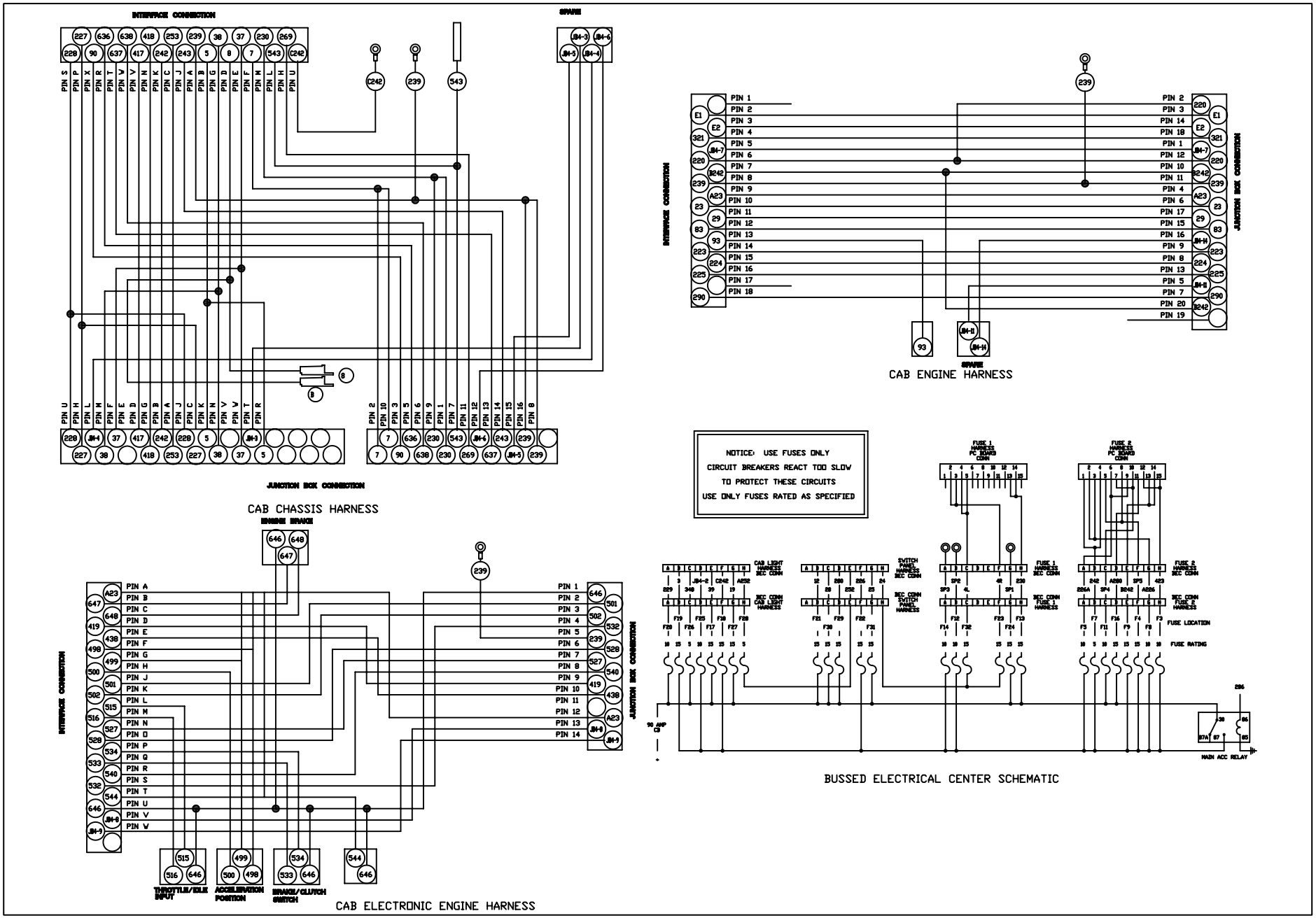

Peterbilt
A DIVISION OF PACCAR

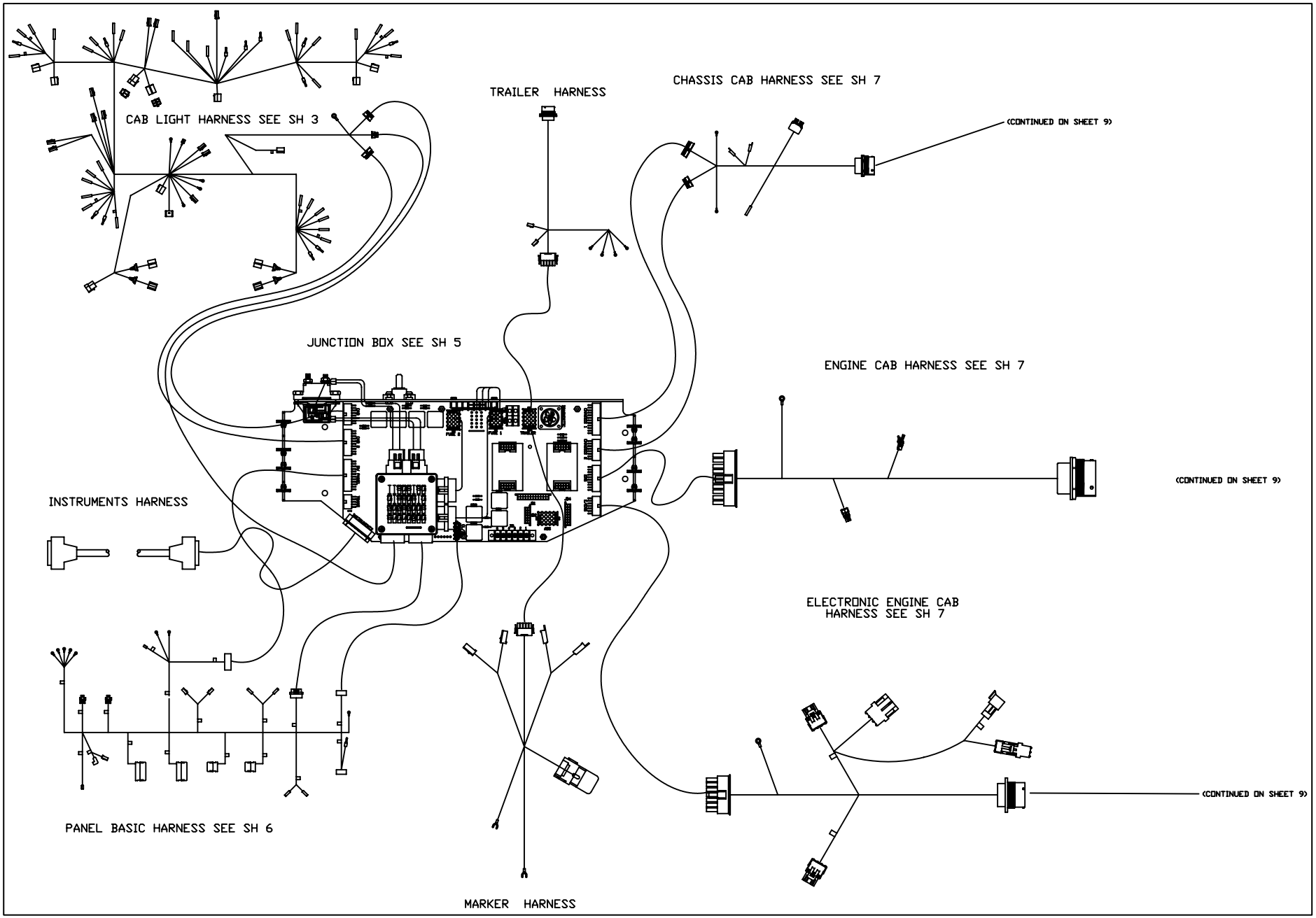

Peterbilt
A DIVISION OF PACCAR

CHASSIS HARNESS SEE SH 1

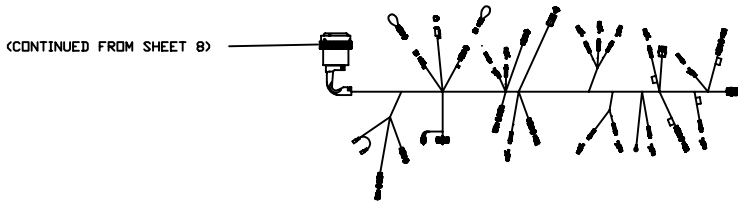

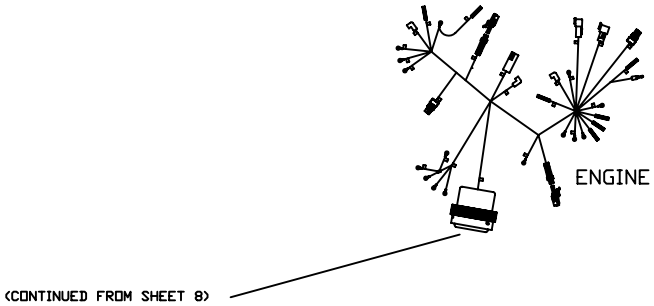

ELECTRONIC ENGINE HARNESS

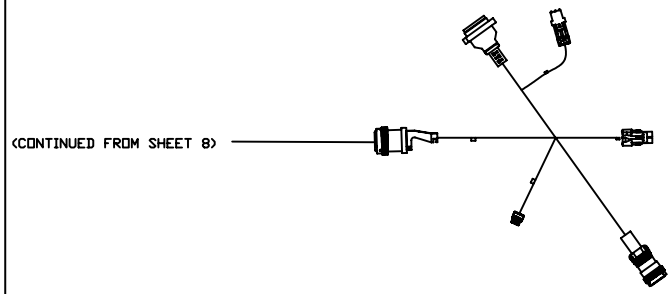

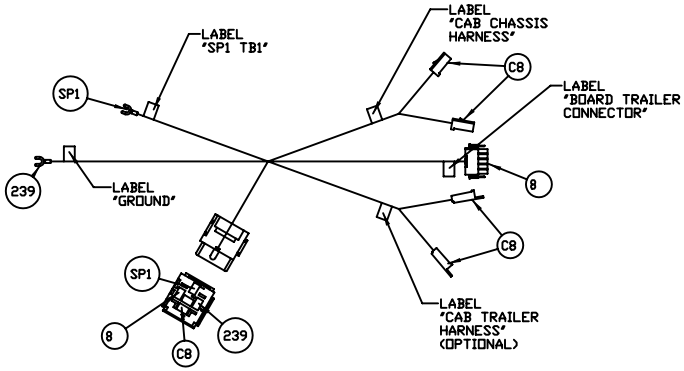

MARKER HARNESS