1.1.18 install lifting eye

Technical data

Tightening torque, lifting eye

Attachment bolts	60 Nm [531 lb-in]

M036868 - 03.25.2013

1.2.1 install flywheel housing (Flywheel housing)

Technical data

Mounting product, flywheel housing

Sealant for flywheel housing sealing surface (A)	"Loctite 510"

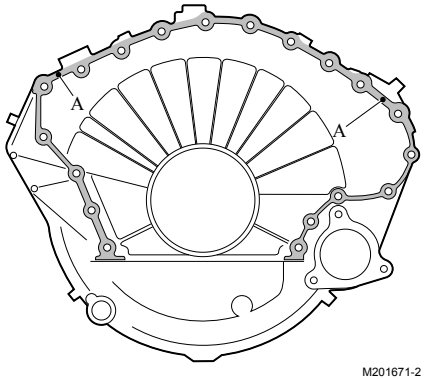

M031384 - 02.10.2017

Tightening torque, flywheel housing

Flywheel housing attachment bolts 110 Nm [82 lb-ft]

Position of flywheel housing attachment bolts

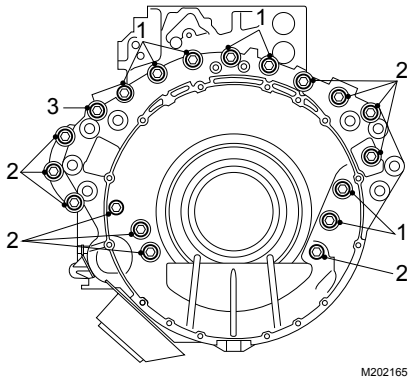

1	Attachment bolt M12 x 60
2	Attachment bolt M12 x 100
3	Attachment bolt M12 x 120

M033401 - 12.22.2016

1.2.2 install both sides engine bracket (Engine mountings)

Technical data

Tightening torque, engine mountings

Refer to ServiceNet document KM813022 for chassis-specific engine mount installation and torque instructions.

Engine mounting at flywheel end

Attachment bolts (1)	260 Nm [192 lb-ft]
Attachment bolts (2)	260 Nm [192 lb-ft]

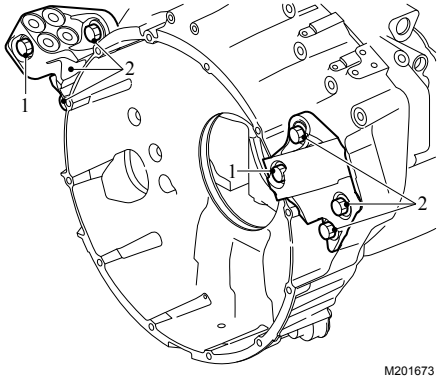

M032337 - 09.28.2017

1.2.4 fixing supply pipe dosing module, fuel (Fuel system)

Technical data

Tightening torque, supply pipe dosing module, fuel

Attachment bolt (1)	20 Nm [177 lb-in]
Union nut (5)	20 Nm [177 lb-in][(1)]

(1) Apply a drop of clean engine oil.

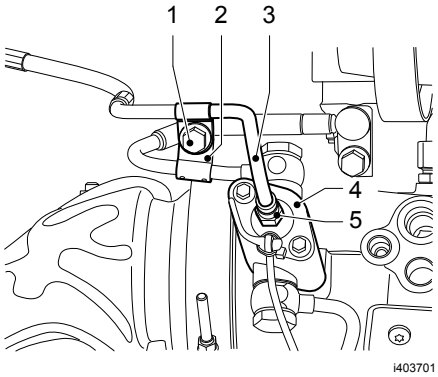

M032330 - 08.12.2014

1.2.5 install bracket, electrical system (Electrical system, engine)

Technical data

Tightening torque, assembly bracket, electrical system

Bracket attachment bolts M8	30 Nm [266 lb-in]

M036112 - 07.19.2013

1.2.6 install injector leak pipe (Fuel system)

Technical data

Tightening torque, injector leak pipe

Banjo bolt (5)	16 Nm [142 lb-in][(1)]
Non-return valve (8)	35 Nm [310 lb-in][(1)]
Attachment bolt, pipe clip (12)	30 Nm [266 lb-in]

(1) Fit new usit rings.

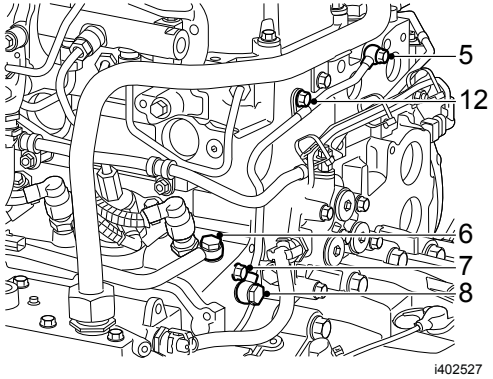

M032477 - 05.19.2017

1.2.7 fixing compressor pipe 01, suction side (Air compressor)

Technical data

Tightening torque, compressor pipe

Bracket attachment bolts	30 Nm [265 lb-in]
Compressor union nut	100 Nm [70 lb-ft]

M032446 - 01.14.2013

1.2.9 install flywheel (Flywheel)

Technical data

Tightening torque, flywheel

Attachment bolts (1)[(1)]	
1st phase	80 Nm [59 lb-ft]
2nd phase	260 Nm [192 lb-ft]
3rd phase	120°

(1) Bolts can be used again if a new nut can be screwed on over the complete cleaned bolt thread by hand.

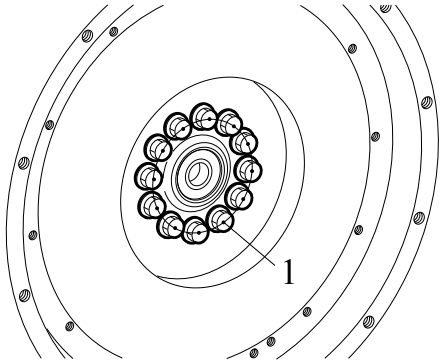

M201687

M031000 - 03.19.2015

1.2.10 install crankshaft sensor (Sensors electrical system, engine)

Technical data

Tightening torque, sensors left side view

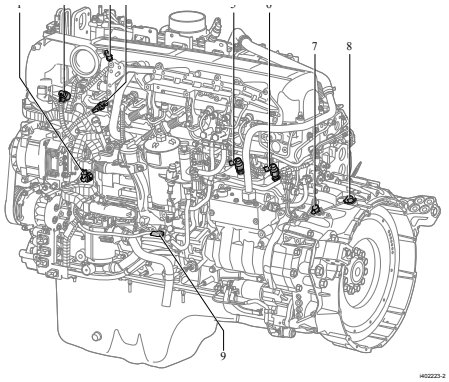

Oil pressure sensor (1)	30 Nm [266 lb-in][(2)]
Inlet air boost pressure sensor (2)	30 Nm [266 lb-in][(2)]
Intercooler air temperature sensor (3) attachment bolt	10 Nm [89 lb-in][(1)(2)]
Boost air temperature sensor (4) attachment bolt	10 Nm [89 lb-in][(1)(2)]
Fuel temperature sensor (5)	30 Nm [266 lb-in]
Fuel pressure sensor (6)	30 Nm [266 lb-in]
Camshaft sensor (7) attachment bolt	10 Nm [89 lb-in][(3)]
Crankshaft sensor (8) attachment bolt	10 Nm [89 lb-in][(3)]
Crankcase pressure sensor (9) attachment bolts	6 Nm [53 lb-in]

(1) Do not touch other objects with the tip of the sensor.

(2) Always use a new sealing ring.

(3) Always use a new O-ring.

M033435 - 03.10.2016

1.2.11 install camshaft sensor (Sensors electrical system, engine)

Technical data

Tightening torque, sensors left side view

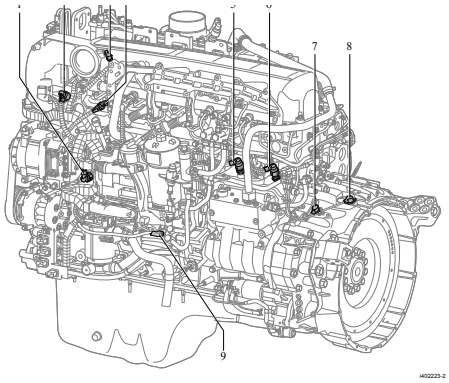

Oil pressure sensor (1)	30 Nm [266 lb-in][(2)]
Inlet air boost pressure sensor (2)	30 Nm [266 lb-in][(2)]
Intercooler air temperature sensor (3) attachment bolt	10 Nm [89 lb-in][(1)(2)]
Boost air temperature sensor (4) attachment bolt	10 Nm [89 lb-in][(1)(2)]

Fuel temperature sensor (5)	30 Nm [266 lb-in]
Fuel pressure sensor (6)	30 Nm [266 lb-in]
Camshaft sensor (7) attachment bolt	10 Nm [89 lb-in][(3)]
Crankshaft sensor (8) attachment bolt	10 Nm [89 lb-in][(3)]
Crankcase pressure sensor (9) attachment bolts	6 Nm [53 lb-in]

(1) Do not touch other objects with the tip of the sensor.

(2) Always use a new sealing ring.

(3) Always use a new O-ring.

M033435 - 03.10.2016

1.2.12 install blanking plate, flywheel housing (Flywheel housing)

Technical data

Tightening torque, blanking plate, flywheel housing

Attachment bolts	30 Nm [266 lb-in]

M032380 - 07.02.2013

1.2.13 install starter motor (Alternator and starter motor)

Technical data

Tightening torque, starter motor

Attachment nut (1)	4 Nm [36 lb-in]
Attachment nuts and bolts (2)	79 Nm [58 lb-ft]
Attachment nut (3)	25 Nm [221 lb-in]

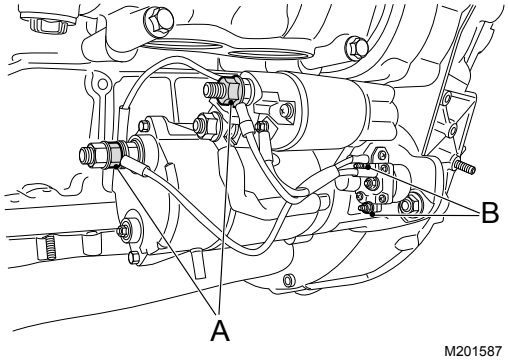

M021697 - 01.16.2013

1.2.14 connect starter motor (Alternator and starter motor)

Technical data

Tightening torque, starter motor

Attachment nut (1)	4 Nm [36 lb-in]
Attachment nuts and bolts (2)	79 Nm [58 lb-ft]
Attachment nut (3)	25 Nm [221 lb-in]

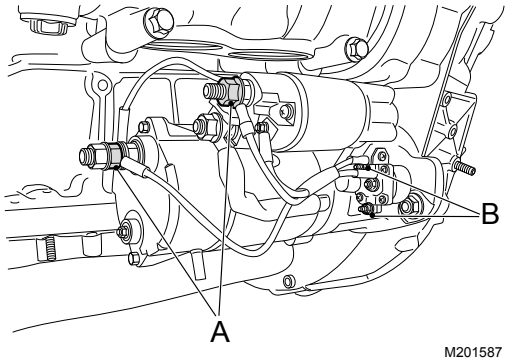

M021697 - 01.16.2013

1.2.15 mount sealing rubber, oil sump (Lubrication system)

Technical data

Mounting data sealing profile oil sump

Mounting sequence, oil sump
sealing profile

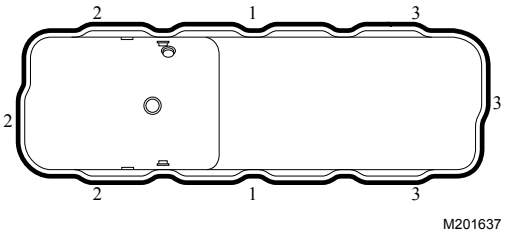

M032180 - 12.04.2012

1.2.16 install steel oil sump (Lubrication system)

Technical data

Tightening torque, oil sump

Attachment bolts (1)	30 Nm [266 lb-in][(1)]

(1) Tighten crosswise, starting in the center.

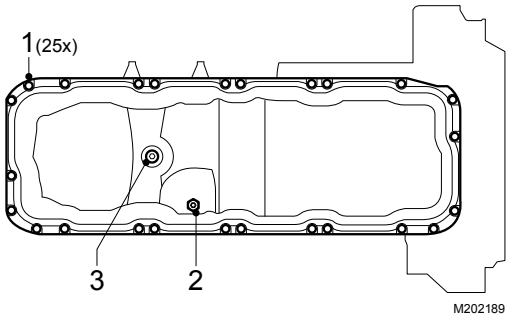

M032491 - 07.24.2018

Mounting product, oil sump

Cleaning agent	Loctite 7070
Sealing agent	"Loctite SI 5910"

M028384 - 08.29.2018

1.2.19.1 install oil sealing plug, fine metric thread (Lubrication system)

Technical data

Tightening torque, sealing plug oil sump

Sealing plug	60 Nm [531 lb-in][1]

(1) Fit a new copper sealing washer.

M032184 - 03.05.2013

1.2.19.3 fill oil engine

Technical data

Specification, engine oil

Oil specification	API CJ-4/CK-4 [1][2]

(1) See table below for permitted oil viscosity ratings in relation to the ambient temperature

(2) The primary PACCAR recommendation is for the use of 10W30 multigrade lubricating oil for normal operation at ambient temperatures above -15°C [5°F]. For ambient temperatures below -15°C [5°F], SAE 5W30 may be used, provided it meets API CJ-4 oil specifications and biodiesel or biodiesel blended fuel is not used as fuel for the engine. Using a multigrade oil helps improve engine cranking in low temperature conditions, reduces deposit formation and increases engine durability.

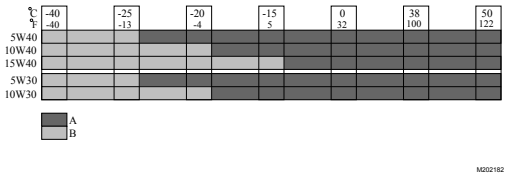

A	Permitted temperature range
B	Permitted temperature range if the engine is equipped with an active oil sump heater that is used before engine start

Initial oil fill from factory:	API CJ-4 10W30

M021451 - 02.23.2017

Filling capacities lubrication system

Filling capacity for service, including oil filter	approximately 40 liters [42.3 quarts]
Filling capacity, first filling	approximately 46 liters [48.6 quarts][(1)]
Range of minimum - maximum level	approximately 9 liters [9.5 quarts]

(1) Filling capacity after engine overhaul.

M032190 - 11.13.2014

This information applies exclusively to the entered chassis number or the selected engine type. Please take into account that this information may change daily. Therefore the provided information is only valid on 10-08-2018. You cannot derive any rights from the information provided with respect to vehicles and/or components of another series, with another chassis number, and/or of another date. (FD298801 / MX_EPA13)